MEDIUM DUTY

5-8M BASE HINGED COLUMN

Patent No: 968113

Designed to EN40. Hot dip galvanised to BS EN1461:1999. Manufactured in steel tube to EN10210

Flange Plate

Type 1	**FA001G**	**Bolts/cross brace M20 x 500mm**
	FC021	**Template**

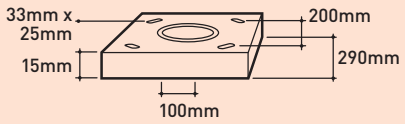

Column Dimensions

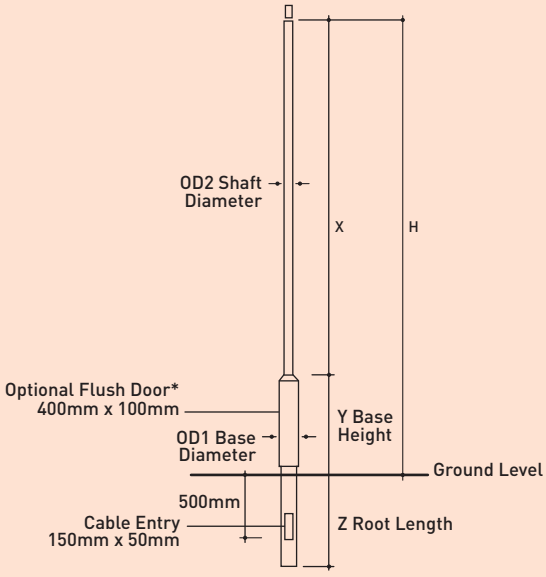

***Flush Door Option**
Flush door enables internal locking mechanism. Side fitted locking screw not required on this model. Add /FD suffix.

Accessories

XXSC003F	**Tamper resistant locking screw**
XXSC003F	**Key for locking screw**
ELSAB1/6A	**Single fuse cut-out, 6A, loop in/out (not fitted)**
ELSAB12/6A	**Twin fuse cut-out, 6A, loop in/out (not fitted)**

Root Mounted

Dimensions (mm) Product Code	Height	OD1	OD2	x	y	z	Weight (kg)	OTM (KNm)	Shear (KN)	Min. Concrete Diameter*	Counterbalance Type & Max. Weight (kg)	
T058RLH	5m	168	114	3815	1050	800	80	10.7	2.4	1167	RLH168	90
T068RLH	6m	168	114	4860	1050	1000	88	10.3	2.1	586	RLH168	70
T088RLH	8m	168	114	6830	1050	1200	106	10.1	1.8	333	RLH168	40

*Root concrete diameter based on poor soil or better, min. 230kN/m²

Flange Plate Mounted

Dimensions (mm) Product Code	Height	OD1	OD2	x	y	Flange Plate	Weight (kg)	OTM (KNm)	Shear (KN)	Concrete Dimension*	Counterbalance Type & Max. Weight (kg)	
T058RLH/FP	5m	168	114	3815	1050	Type 1	72	10.7	2.4	950 x 1100	RLH168	90
T068RLH/FP	6m	168	114	4860	1050	Type 1	80	10.3	2.1	950 x 1100	RLH168	70
T088RLH/FP	8m	168	114	6830	1050	Type 1	48	10.1	1.8	950 x 1100	RLH168	40

*Concrete dimension based on a minimum ground bearing pressure of 150KN/m², (S = square dimension, H = depth)
For complete information on foundation options please refer to www.abacuslighting.com/foundation

Outreach & Floodlight Brackets

Height	Projection Length	Outreach Brackets Single (S)	Outreach Brackets Double (D)	Spigot Lengths /SP 230mm /SP1 100mm	Floodlight Brackets	Floodlight Brackets
		Overlap Fit on Shaft	Flush Fit on Spigot	Type/Bolt Centres (mm)	Overlap Fit on Shaft	Flush Fit on Spigot
5m		**T058RLH**	**T058RLH/SPor/SP1***		**T058RLH**	**T058RLH/SP**
	0.30m	PR6-03/S or /D	PR7-03/S or /D*	Double (800)	FL4/3	FL5/3
	0.50m	PR6-05/S or /D	PR7-05/S or /D*	Triple (800)	FL4/5	FL5/5
6m		**T068RLH**	**T068RLH/SP**		**T068RLH**	**T068RLH/SP**
	0.50m	PR6-05/S or /D	PR7-05/S or /D	Double (800)	FL4/3	FL5/3
	1.00m	PR6-10	PR7-10/S or /D	Triple (800)	FL4/5	FL5/5
8m		**T088RLH**	**T088RLH/SP**		**T088RLH**	**T088RLH/SP**
	0.50m	PR6-05/S or /D	PR7-05/S or /D	Double (800)	FL4/3	FL5/3
	1.00m	PR6-10	PR7-10/S or /D	Triple (800)	FL4/5	FL5/5
	1.25m	PR6-125/S or /D	PR7-125/S or /D			

*Outreach brackets series PR1 & PR2 below 0.50m projection fit onto 100mm spigot (/SP1). 0.50m + on standard 230mm spigot (/SP)
For complete bracket information please refer to pages 35-37

Column Headload Capacity (m²)

Based on UK rationalised wind loading factors for EN40

Product Code	Lantern Mounting/ Projection	Max. Headload (kg)	Light 396	Medium 429	Heavy 466	Very Heavy 576
T058RLH	Post Top	90	1.881	1.728	1.583	1.266
	0.50m Single Outreach	10	0.665	0.661	0.56	0.447
	0.75m Single Outreach	10	0.534	0.49	0.448	0.357
	1.00m Single Outreach	10	0.442	0.404	0.369	0.292
T068RLH	Post Top	70	1.392	1.274	1.163	0.923
	0.75m Single Outreach	10	0.472	0.432	0.394	0.311
	1.00m Single Outreach	10	0.39	0.357	0.325	0.255
	1.50m Single Outreach	10	0.28	0.254	0.23	0.176
T088RLH	Post Top	40	0.547	0.496	0.448	0.351
	0.50m Single Outreach	10	0.307	0.279	0.253	0.199
	0.75m Single Outreach	10	0.247	0.224	0.202	0.157
	1.00m Single Outreach	10	0.199	0.179	0.161	0.123

For complete information on column headloads refer to www.abacuslighting.com/columns.asp

COUNTERBALANCE UNITS

TO OPERATE MEDIUM DUTY BASE HINGED RANGE

Hydraulic Counterbalance - RLH168

This hydraulic unit is popular with companies who have multiple column heights and headloads on one site or over a number of sites.

The advantage is that it can operate the full column range regardless of height and headload.

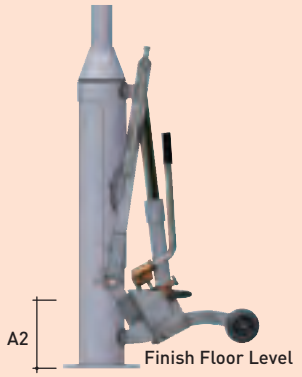

Column Position = Raised, Docked and Locked

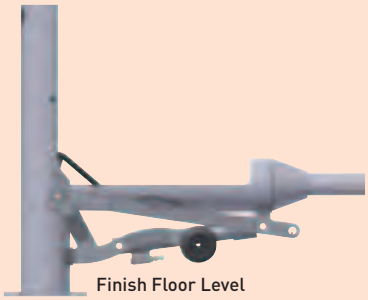

Column Position = Lowered, Un-docked and Un-locked

A2 Design height of the pivot above finished floor level is 300mm. If this distance is less than 250mm, difficulty in fitting counter balance will be experienced

Counterbalance Product Code	Column Height	Safe Working Load (kg) up to 12m	Counterbalance Weights (kg)*
RLH168	5m, 6m, 8m	40, 70, 90kg	37.5

*Weight does not include the operating lever (2.5kg)

Column Carrier – RL900M

Features

The Abacus Column Carrier System has been designed to move base hinged columns safely and conveniently and guide them into position for installation with the minimum of effort.
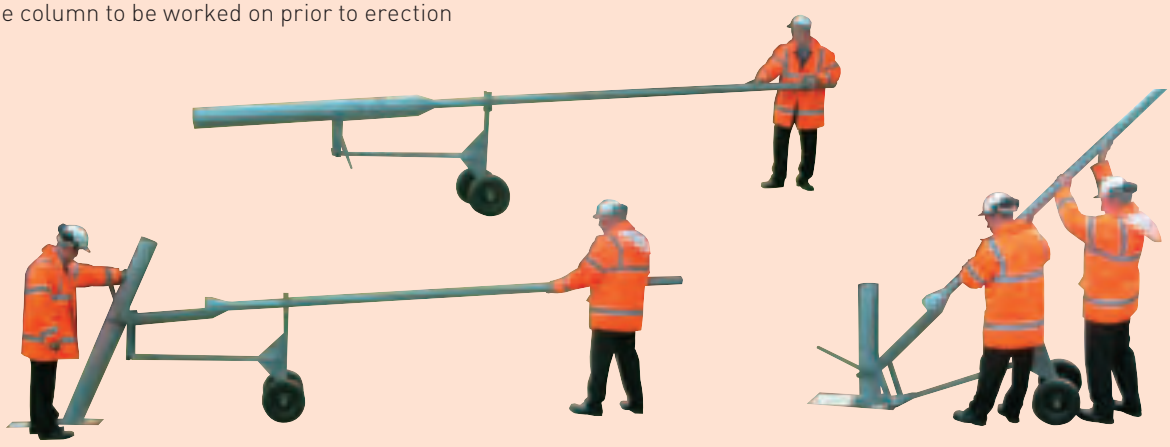
- Designed specifically for the root mounted base hinged column up to 168Ø and a maximum 6m mounting height
- Enables a column to be transported safely to its installation location and provides a stable platform for the column to be worked on prior to erection
- The column carrier can be used by one man for moving columns to the installation site
- The column can be lifted into place safely and easily by two men