PEGASUS 2 AL4250

OPTIMUM REFLECTOR SYSTEM | ULOR 0% | LOW LIGHT POLLUTION | VANDAL RESISTANT 1 | IP65

Optimum Reflector System Patent No. 1151226

Benefits

- Another flat glass lantern for mounting heights of between 5m and 8m
- Thanks to the Optimum Reflector System you'll need fewer lighting points meaning you'll save on installation and maintenance costs – there'll be less cable, gear, lamp replacement, power consumption and waste

Features

- High performance Optimum Reflector System is highly polished and anodised aluminium, producing a square illuminance distribution at ground level
- UV stabilised clear polycarbonate bowl
- Canopy in ABS plastic, available in white as standard with black and dark/silver grey on request but may carry a surcharge
- 76mm entry diameter spigot in cast aluminium, available in colours to match the canopy
- Two lamp type options: high pressure sodium or metal halide, with integral gear
- Four lamp size options: 150W up to 450W (metal halide)
- Option of an internal shield to give asymmetric distribution and backward overspill control

Applications

- Retail and leisure car parks
- Large area lighting

Lighting distribution

- Square
- Asymmetric (utilising optional internal shield)

Colours

- RAL9003 White (standard)
- RAL9007 Gunmetal
- RAL9005 Black

Gunmetal and Black are available on request and at extra cost.

	Lamp wattage and type	Lamp holder	Description	Weight (kg)*	Windage (m^2)
AL4251	150/250/400W SONP-T 150/250/400/450W HQI-T	E40	Square distribution, integral control gear	10.0	0.206
AL4252	150/250/400W SONP-T 150/250/400/450W HQI-T	E40	Asymmetric distribution, integral control gear	10.5	0.206

*Max in range.

Column options
Choose between fixed and base hinged

	8m	6m	5m
Fixed	TB08.AM2	TB06.AM2	TB05.AM2
Base	T088RLH.AM2	T061RLS.AM2	T051RLS.AM2

Accessories

AL4250/PC Photocell

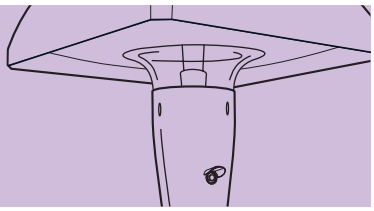

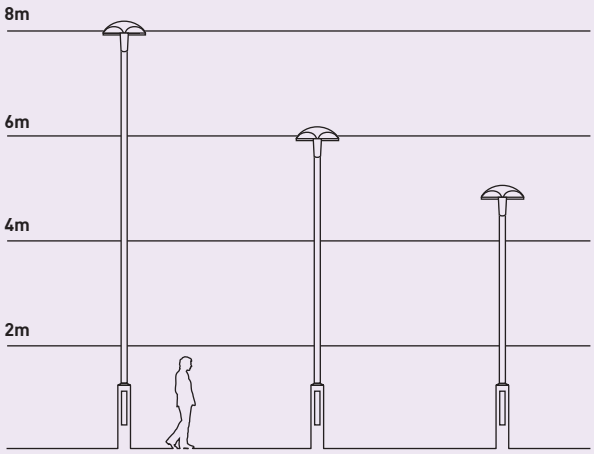

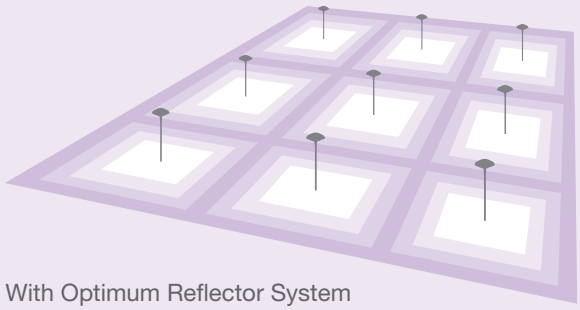

With Optimum Reflector System
Please see page 9 for further information.

Spotlight on Pegasus

Also available with a twin arm option – BKTD.AM2.

Key features

1.

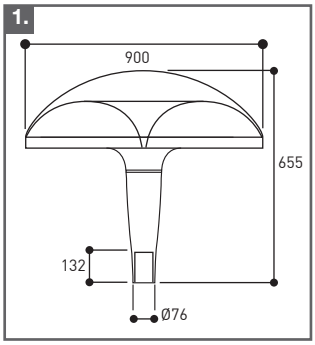

Dimensions & Mounting
Direct spigot entry onto 76mm diameter column shafts

Mounting height: 5m – 8m

2.

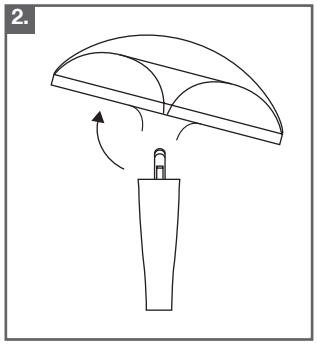

Maintenance
Release three screw clamps and lift lantern canopy

3.

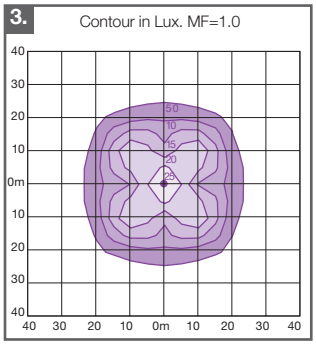

Square distribution
Lamp 400W SONP-T

Mounting height: 8m

4.

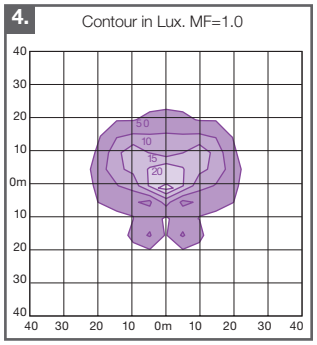

Asymmetric distribution
Lamp 400W SONP-T

Mounting height: 8m

All dimensions are in mm.