THEA AL5400

IP65

ULOR 0% 60°

Benefits

- Robust floodlight offering flat glass optics at 60° elevation, with the option of either 1kW or 2 x 400W lamps
- Ideally suited to high mast floodlighting applications such as ports, airports and industrial areas

Technical Features

- Die-cast aluminium body polyester powder coated finish metallic grey RAL9006
- Toughened front glass, hinged to the body and secured via extruded aluminium clips
- Breather system fitted to all versions
- High performance reflector in polished and anodised aluminium
- Stirrup in hot dipped galvanised steel. Fixing ensures flat glass +/-10° elevation adjustment
- Separate connection chamber/ignitor housing, connected to rear/top of floodlight body
- Access to lamp via front glass. Electrical installation via rear/top. Connection box houses ignitor

Colours

RAL9006 Silver

	Lamp wattage and type	Lamp holder	Description	Weight (kg)*	Windage (m^2)
AL5401	2 x 400W SONP-T/HQI-T	E40	Narrow Beam	21.0	0.5
AL5402	2 x 400W SONP-T/HQI-T	E40	Medium Beam	21.0	0.5
AL5403	1000W SONP-T/HQI-T	E40	Narrow Beam	21.0	0.5
AL5404	1000W SONP-T/HQI-T	E40	Medium Beam	21.0	0.5

Dimensions

Dimensions in mm

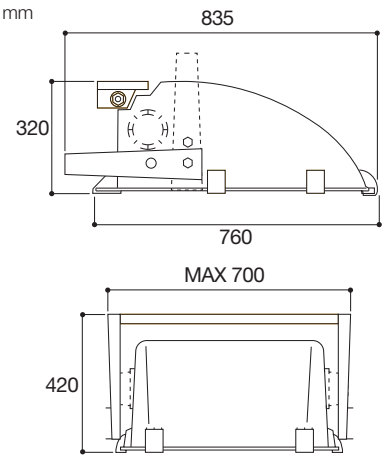

Mounting:
Stirrup mounted using M20 fixing. Stirrup adjustment +/- 10°

Key features

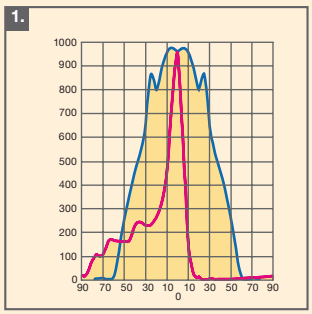

AL5401
2x400W SON-T
Narrow beam

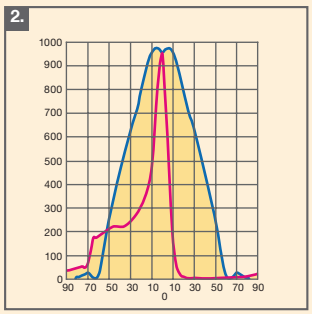

AL5402
2x400W SON-T
Medium beam

*Max in range.